Simulation of mechanical joining for automotive applications

by

Johannes Gårdstam

February 2006
Licentiate Thesis from
Royal Institute of Technology
Department of Mechanics
SE-100 44 Stockholm, Sweden

Simulation of mechanical joining for automotive applications

Johannes Gårdstam 2006
Department of Mechanics, Royal Institute of Technology
SE-100 44 Stockholm, Sweden

Abstract

Regarding the use of material, modern lightweight car bodies are becoming more and more complex than previous constructions. The materials nowadays are used for a more specific field of application and more high strength steels are used and also other materials like aluminium, stainless steel, reinforced polymers are used more frequent. The joining of these materials often requires new or modified joining processes. The aim with this thesis is concerned with the development of simulation models of the joining process as well as mechanical properties of self piercing riveted (SPR) joints and pierce nut joints. In both of these joining methods problems occur when introducing more high strength steel sheets. For SPR, fractures occur in the rivet, and for pierce nut the thread will be damaged.

Since both the SPR process and the pierce nut process expose the material for plastic deformation up to 150%, correct material properties for very large strain and a simulation program that could handle this was required. With the commercial finite element program Deform2D an axi-symmetric model has been built for the SPR process and the pierce nut process. Because of the computational time, 3D simulations were only used where it was necessary. The developed 3D models use the commercial finite element program ABAQUS-Explicit. All simulation models have been verified with satisfactory agreement to experimental results.

For SPR, an axi-symmetric simulation model was used for evaluating and optimising the setting process in the stainless steel sheets EN1.4301, HyTens 800 and HyTens 1200. Subsequently, 3D models were used for predicting the mechanical properties of new SPR joints that have showed reduced risk for rivet cracking. In pierce nut simulations, nuts with hardness 8 and 10 have been set in the high strength steel sheet DP600. An axi-symmetric simulation model was used for centred nut setting and two different simulation models in 3D were used to evaluate eccentric nut setting and torque resistance.

This work resulted in more knowledge about the fracture risk in the rivet and how to reduce it. The strain and stress, which was used as fracture indicators, were reduced to the half with modifications of the rivet and the die geometry. Mechanical property simulations in shear and peel load resulted in satisfactory results for new SPR joints that have showed reduced fracture risk during rivet setting. New die and rivet designs can be developed effectively by combining the process and mechanical property simulations.

For a pierce nut joint in high strength steel sheets (1.5mm DP600), the simulations show that the cutting of the sheet in combination with eccentric setting over the die causes the thread damage. The thread damage can be avoided by changing the dimension of the nut or by increasing the strength of the nut material. The simulation models can also be used to develop new nut and die geometries for future applications.

Descriptors: self piercing riveting, pierce nut, mechanical joining, finite element modelling, high strength, stainless steel

Preface

The work that is presented in this licentiate thesis was performed at the Swedish Corrosion and Metals Research Institute between 2003 and 2005. The main purpose with this work was to develop simulation models that could describe the process conditions in mechanical joining with acceptable accuracy.

The work that is done at self piercing riveting was financed by the National Swedish Program Board for Automotive Research (PFF), Outokumpu stainless Research Foundation, Renault, Volvo Truck, Acciaierie Valbruna and Henrob. The national Swedish program Green car and the companies Strömsholmen, Finnveden and Volvo Car financed the work done at Pierce nut. I would like to thank all of those and their representatives.

I would also like to express my acknowledgements to Prof. Arne Melander at KIMAB for his large interest in my work and for valuable discussions and guidelines.

Prof. Anders Eriksson at the department of Mechanics at KTH is also acknowledged for his support and guidance, and for the possibility for me to perform this work in co-operation with the Corrosion and Metals Research Institute.

My colleagues and friends at the institute and at the department of mechanics, thank you all for a nice time during this work.

And finally I would like to thank my family, and a special thank is dedicated to my girlfriend Linda for her great support and encouragement.

Stockholm, December 2005
Johannes Gårdstam

Paper I. Gårdstam J., Simulation of self piercing riveting of high strength austenitic stainless steel in 1 and 2 mm sheet thickness, Swedish Institute for Metals Research, report IM-2004-537

Paper II. Gårdstam J., Simulation and verification of self pierced rivet joints of stainless sheet steels, Swedish Institute for Metals Research, report IM-2004-547

Paper III. Gårdstam J. and Melander A., Self-piercing riveting of stainless sheet steels-simulation and verification, 11th Paderborner Symposium Fügetechnik, Mechanishes Fügen und Kleben (2004) p. 135-143

Paper IV. Gårdstam J., Simulation and verification of pierce nut in high strength sheet steels, Corrosion and Metals Research Institute, report IM-2005-118

Contents

1. Introduction

1.1 Background

Until recently car bodies were made from mild steel and joined mainly using spot welding [1]. This was because steel is both cheap and strong, with spot welding as the cheapest method of joining, and for a typical car body between 3,000 and 4,000 spot welds were used. For automotive structures, the stiffness and the fatigue behaviour is mainly influenced by the properties of their joints. However, the mechanical properties of the joint are not the only interesting parameter. For a joining method to be attractive for the industry, it must be automated and economically attractive or the only option for joining the selected materials. To meet the requirements of various parts of the car, modern lighter weight vehicles contain a large number of different sheet materials of different strengths. According to [1] the driving forces to introduce new materials are lower weight, increased safety and lower costs. This often leads to more use of sheet steels with increased strength, as a consequence, the pressure to improve the joining methods has increased. Spot welding is still the most common joining method. This is due to the fact that the fatigue resistance of spot welds increases only slightly with the sheet strength. On the other hand, mechanical joining techniques are characterised by improved fatigue properties for more high strength materials [2]. Examples of mechanical joining techniques are riveting and clinching, but also fasteners like screws and bolts. In a car body there is nowadays also an increased number of different materials like stainless steel, aluminium, reinforced polymers, etc. which also require new joining methods, especially in joints with dissimilar sheet materials. Here often mechanical joining and adhesive bonding are the only possible joining methods. New techniques have been developed to automate and simplify the process of mechanical joining as much as possible, which is a requirement to reduce costs. Self piercing riveting (SPR), clinching and pierce nuts are three methods to automate and reduce costs for mechanical joining. The developed techniques are often suitable or developed for mild steel and therefore they require some modifications when used with more high strength steels or with new material combinations. A simulation model for such modification would therefore be desirable in order to simplify the development and to reduce the development costs.

Self piercing riveting

SPR is a relatively new technology that was developed for joining aluminium, since aluminium is difficult to spot weld due to its high thermal conductivity, low melting range and propensity to form oxide surface film [3].

The SPR technique joins two or more sheet layers in a single step without any pre-drilled or pre-punched holes. The rivet is designed to penetrate through the top material and is spreading out in the lower material under the influence of a die that is positioned below the lower sheet. Since the lower sheet is not pierced the resulting joint is resistant to gas and liquid from the die side and therefore also resistant to corrosion

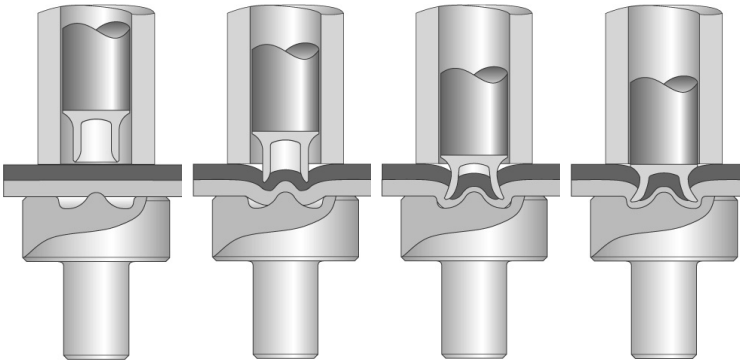

Figure 1. Setting process of self piercing riveting. Copy from [4]

from that side. Known disadvantages of SPR joints are according to [5] the requirement of access to both side of the joint, the relatively large cost, the consumption of rivets, the high setting forces that require a strong and relatively heavy C-frame for the robots, see Figure 4. and that the finished joint is not flush on both sides. Known advantages of SPR joints are the capability to join dissimilar materials, such as aluminium to steel, the ability to join galvanised or pre-painted materials without damaging the coating, the use in combination with adhesive bonding and the good fatigue properties.

Clinching

Clinching is a combination of drawing and forming that locks together sheet metal layers. Multiple layers can be joined, though clinching is most commonly used for only two layers. In clinching, a punch drives the two layers of metal into a die, the upper layer of material spreads into the lower layer so it cannot be pulled out, see Figure 2. The process requires use of ductile sheet metals, such as steel and aluminium. Many plastics are difficult to clinch since plastics tend to resume their original shape after being clinched [6]. Clinching is technically and economically attractive. However, manufactures are moving towards thinner and stronger materials. This may affect the ductility of the sheet materials and reduce their suitability for clinching. Optimisation or modification of the clinching process may solve that problem [7].

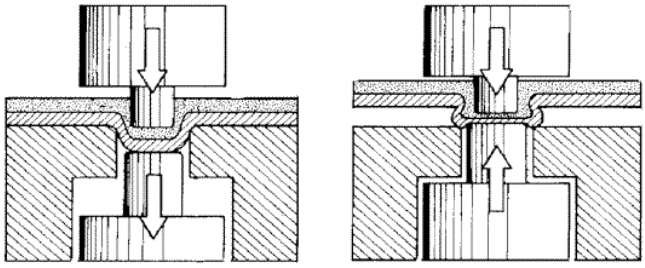

Figure 2. Clinching process. Copy from [8]

Pierce nut

Screw fasteners are labour intensive and difficult to automate and therefore expensive in medium to high production runs. However, sometimes access to only one side is possible or unfastening of the joint may be needed during repair. This is possible with screws and nut, provided that the nut is mounted into the sheet. With screw fasteners it is also possible to combine an unlimited number of sheets of diverse materials and thicknesses. Pierce nut, Figure 3, is a technique that punches the nut directly into and securely fixes the nut to the work piece in one operation [9]. No pre-punched or pre-drilled holes are required. The pierce nut process is often integrated to the pressing line, where sheets will be formed to a beam, door, roof etc. and simultaneously as the sheet will be formed, the nut will be inserted into it. Pierce nut offers significant savings in time and costs over weld nuts that are installed outside the stamping line. However, the pierce nut requires a good installation to ensure optimal performance and the performance of a pierce nut can be divided into two sections. First the mechanical attachment between nut and sheet, e.g. torque and push out resistance, this is called for the installation performance [10]. Second, the mechanical strength of a final joint with the screw installed, e.g. the shear and peel strength of the final joints. In the present work only the installation performance are evaluated.

Similar to SPR and clinching, pierce nuts can also be mounted with a robot and a C-frame. Robots are also common when assembling the screws in the nut.

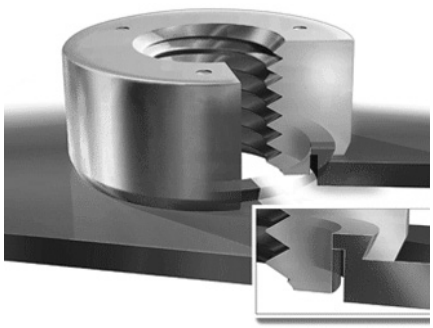

Figure 3. Pierce nut. Copy from [11]

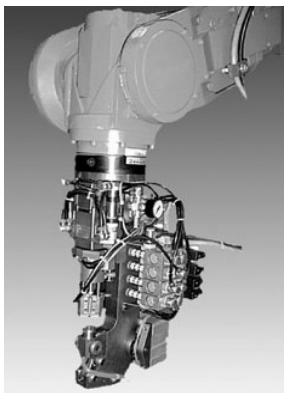

Figure 4. C-frame. Copy from [12]

1.2 Mechanical properties of joints

If the same material is used in the top sheet and the lower sheet, clinching and SPR are in competition with spot welding. To estimate the joint quality, two types of testing modes are useful, shear mode and peel mode. The joint properties may also vary between static load and fatigue load. In [13], clinching and SPR joints in sheet thicknesses 1.0 + 1.0 mm have been compared to spot welded joints in shear and peel modes to evaluate static and fatigue strength. The sheet material is ZstE340, which is a high strength steel with Rp0.2 at 340 MPa.

In Figures 5 and 6, the static shear and peel strengths can be observed. The largest values, white bars, indicate maximum static forces and the grey bars indicate the stretching forces. The stretching force is the maximum force the joint can carry before it starts yielding.

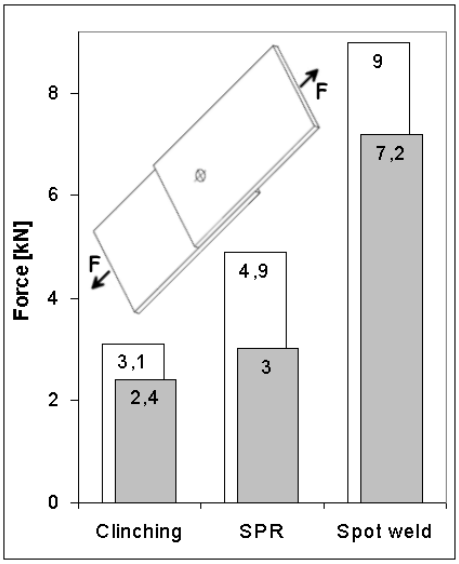

Figure 5. Static shear strength of clinched, spot-welded and SPR joints, redrawn from [13].

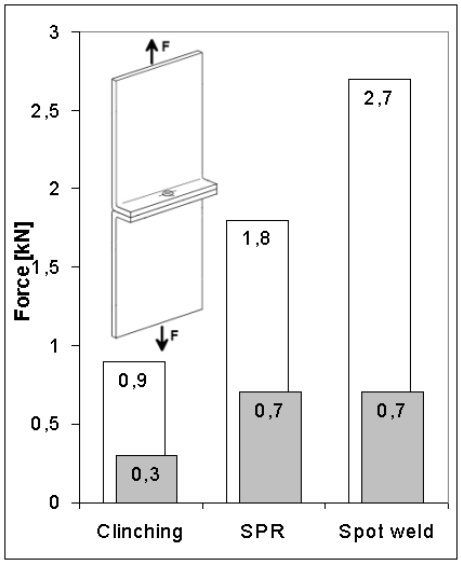

Figure 6. Static peel strength of clinched, spot-welded and SPR joints, redrawn from [13].

Joints performed with spot welding shows a higher shear and peel strength compared to the other joining techniques. Clinched joints show the lowest strength, both in shear and peel mode. Values from SPR joints are between the spot welded and clinched joints. However, the results from static testing are not valid for cyclic loading, see Figures 7 and 8. The mechanical joints give high strength during fatigue testing. In this set up, SPR shows the best results both in shear and peel load. Clinching also gives good results in shear mode. Depending on the design of the structure, the static strength or the fatigue strength is most important for dimensioning.

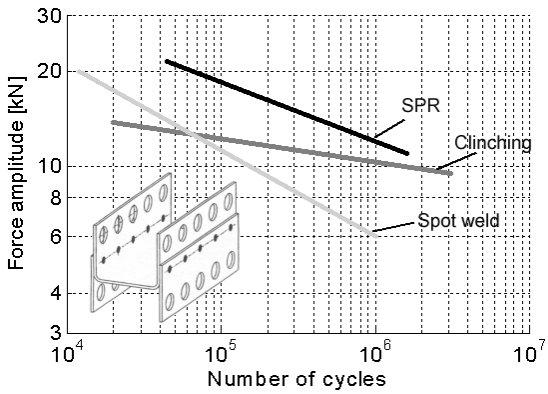

Figure 7. Fatigue properties for shear loaded joints in an H-specimen. Based on data from [13].

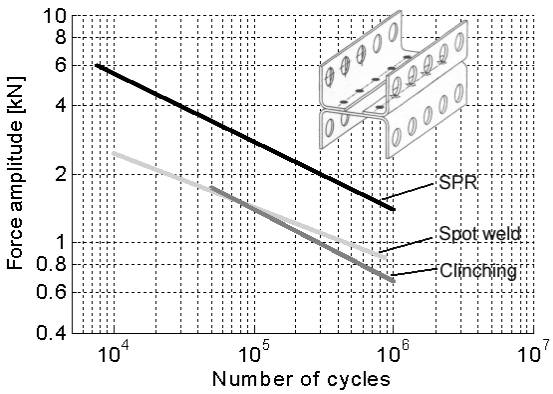

Figure 8. Fatigue properties for peel loaded joints in an H-specimen. Based on data from [13].

1.3 Problems with mechanical joining in high strength steel sheets

For a long time there has been a trend towards using higher strength steels. In a typical Volvo car (2002) 45% of the body consists of various kinds of high strength steels [1]. With an increasing number of high strength steel parts, difficulties occur with joining technologies previously used with milder steel. Even if more high strength steel will make the mechanical joining more difficult, it will also increase the use of mechanical joining like SPR, especially because of the good fatigue properties as seen in section 1.2. The difficulties to perform a SPR joint in high strength steel sheets are related to the reduced ductility of high strength steels. In particular, the lower sheet requires a sufficient ductility. The higher strength of the sheet material requires a higher strength of the rivet material to avoid collapse. At the same time, the rivet must exhibit sufficient ductility to perform a joint. Finally an increased setting force is required, which will result in larger and heavier C-frames to maintain the parallel surface between rivet and die. The automated robots that will carry the C-frame may have problems if the mass or the size of the C-frame increases too much.

During setting of pierce nuts there are other problems that occur when introducing new higher strength materials. In industrial nut setting operations it was found that the thread of the pierce nut was damaged and scatter in mechanical properties were obtained when the pierce nut RF-M6 was set in a sheet of high strength steel DP600 (Dual Phase). DP600 is a common type of high strength steel used today and the number 600 stands for the limit in ultimate tensile strength i.e. 600 MPa.[1].

1.4 Contribution with this thesis

All kinds of mechanical joining are interesting for future structures. In particular, this is the case for mechanical joints that can be highly automated, which reduces the production costs. A method to develop, modify and optimise the joints for a specific sheet combination, or special sheet materials is therefore desirable.

Important factors to perform an optimised SPR joint are the combination of sheet material, rivet material, rivet geometry and die geometry. Using Finite Element Method ("FEM") simulation, the riveting process can be optimised in an effective way, which is done in Paper I. FEM-simulation can also be used to evaluate the mechanical properties for the SPR joint, which is done in Paper II and Paper III.

The FEM can also be used to simulate the nut setting process. With a reliable simulation model, the simulation will give knowledge about the whole nut setting process and consequently why thread damage occurs in the experimental trials. It is also possible to develop new and better nut or die geometries. Three simulation models are required for the pierce nut process to evaluate all interesting parameters. First, a model for centred nut setting, secondly, a model for eccentric nut setting, and finally a model for evaluating the torque resistance, this is done in Paper IV.

By using numerical simulation models this thesis aims to contribute to the understanding of mechanical joining processes in high strength steels. It introduces and evaluates simulation models that are possible to modify and to use for development of new products.

2 Finite Element Method

Analysis based on the finite element method ("FEM") is a useful tool to simulate the process condition as well as the mechanical properties of a joint. It is important to treat the problem correctly and since FEM-simulation always is an approximation it is important to use the best approximation. Independent of simulation software, equivalent input parameters must be inserted into the simulation programs. The correctness of the input is of great importance for the reliability of the simulation results.

2.1 Implicit and Explicit FEM

The differential equations used in FEM can be integrated by numerical time stepping with both implicit and explicit methods. Both methods can be used for static and dynamic analyses. In this work, two FEM Softwares are used. DEFORM-2D is used for axially symmetric simulations. These are based on an updated Lagrangian formulation, and uses implicit time integration. The program is specialised for large plastic deformation and cutting of an object. A strength with DEFORM-2D is the automatic remeshing that often is required to handle large plastic deformations correctly. ABAQUS is used for the 3D simulations. ABAQUS give the possibolities to solve the problem with an implicit or an explicit solver. In this work ABAQUS-Explicit was used since it contains an element deletion procedure and since the simulations will be non-linear. ABAQUS-Explicit is based on the central difference time integration, together with the use of lumped masses giving a diagonal mass matrix. The system to be solved is therefore uncoupled and the stiffness is calculated on the element level without a global stiffness matrix. Equilibrium in ABAQUS-Explicit is defined as Eq 1.

$$\mathbf{M} \cdot \ddot{\mathbf{u}} = \mathbf{P} \cdot \mathbf{I} \qquad \text{Eq 1.}$$

where $\mathbf{M}$ is the diagonal mass matrix, $\mathbf{P}$ the external applied force, $\mathbf{I}$ the internal element forces and $\ddot{\mathbf{u}}$ the nodal acceleration [14]. In combination with the small time step required for the explicit integration to be stable, see Paper IV, there will be many small equations to solve. Therefore the explicit solution time is linearly proportional to the number of degrees of freedom ("DOF"). Because of the opportunity to do parallel calculations it can effectively be divided into several CPUs.

For the implicit integration rule, a global dynamic stiffness matrix is used. The equation system containing the stiffness matrix must be solved and the size of the stiffness matrix is related to the DOF in the structure. Consequently the implicit solution time is therefore related to DOF squared. Usually a much larger time step is used in the implicit calculations compared to the explicit calculations. Therefore an implicit calculation only solves one or a few very large equations. When solving a nonlinear problem implicitly, the solution method requires several time steps since the stiffness matrix must be recalculated during the course of the analysis [14]. This will make a nonlinear analysis much more time consuming than a linear analysis and an explicit solver may be preferable, since it already uses small time steps.

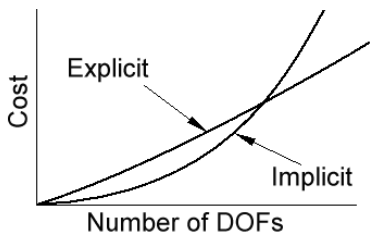

Figure 9. Comparison of solution times with increased number of degrees of freedom

2.2 Material model

In the SPR and the pierce nut processes the material of the objects, sheet, nut and rivet, will undergo large plastic deformations. This demands the correct flow properties to be used in the

simulations. Most materials are nonlinear during plasticity since a nonlinear function rather than a constant relate the stresses and strains. Therefore the SPR and pierce nut simulations will be nonlinear if the material starts yielding. Several different materials are evaluated from compression tests and used in the simulations. For the self piercing riveting simulations the flow properties of the rivet materials and different stainless steel sheets were evaluated. For the pierce nut simulations the sheet material DP600 was evaluated and also three different hardnesses of the nut material. See Figure 10 to compare the material flow properties. The materials show more or less strain hardening; especially the stainless sheet materials (EN 1.4301, HyTens800 and HyTens1200) exhibit significant hardening. In the simulations an isotropic hardening rule was used. Isotropic hardening means that the yield surface changes its size uniformly in all directions and the yield strain in all directions will be the same, i.e. the radius of the cylinder in Figure 11 increases. The surface of the cylinder is the yield surface and points within the cylinder represent states of nonyielding [15]. If all stress components are positive, or all are negative, very high stresses can occur without yielding of the material. This is called the hydrostatic pressure and is defined as the distance between the origin and the flow locus that is perpendicular to vector P.

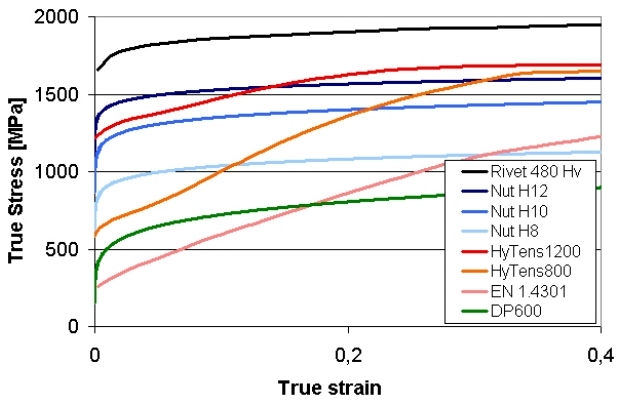

Figure 10. Flow properties of sheet, nut and rivet material.

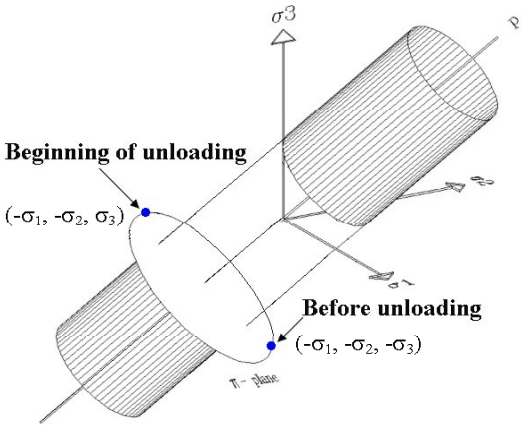

Figure 11. Von Mises yield criterion in 3D-principal stress space. With loading point from the rivets under head radius.

Isotropic hardening is for common metals in conflict with the observed behaviour when yielding reappears i.e. when loading is reversed [16]. An alternative to isotropic hardening is the kinematic hardening that moves the cylinder in Figure 11 instead of increasing the radius of it like in isotropic hardening. A stress and strain plot of isotropic and kinetmatic hardening can be observed in Figure 12. Since kinematic hardening is only valid for elastic-plastic objects under small deformations [17] it is not suitable for the SPR and pierce nut simulations. In the self piercing riveting process, cracks may occur in the rivets under head radius, Figure 22. It is believed that such cracks are generated during the first unloading sequence after riveting. At that stage the loading point in stress space moves very quickly from the lower side of the flow locus towards the upper side, see Figure 11. A kinematic hardening may then be a more appropriate description of the material behaviour during the unloading sequence.

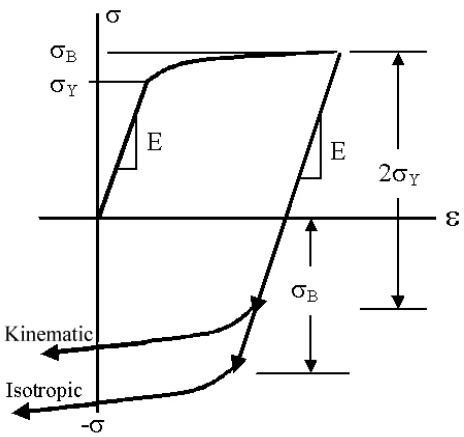

Figure 12. Hardening rules, redrawn from [16]

2.3 Contact conditions

The relations between objects define how different objects in a simulation interact with each other. All objects that may come in contact with each other through the simulation must have a contact relation defined to keep the objects from penetrating each other. The relationship is often called master-slave contact. With a master-slave relation the nodes from a master object can penetrate the slave surface but the slave node are not allowed to penetrate a master surface, see Figure 13. If the upper object is the slave surface instead the contact will be as in Figure 14. To reduce the problem with overlapping surfaces and large gaps the slave object should be the object with a finer mesh. From a general point of view the object of hardest material should be the master object. In the case of two objects consisting of the same material, either can be the slave although the object expected to elastically deform the most should be defined as the slave [17]. It is important to define these relationships correctly to model a forming process accurately.

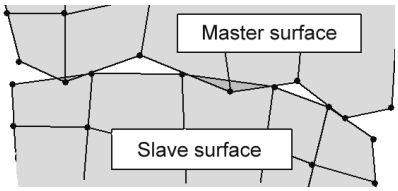

Figure 13. Master object penetrates slave object.

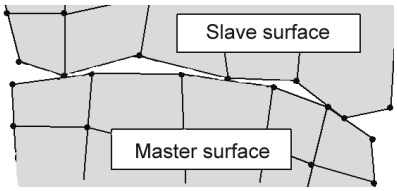

Figure 14. With opposite master-slave order, there are large gaps.

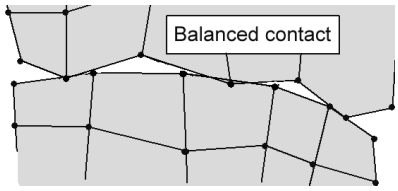

Figure 15. Balanced contact, average of two contact calculations.

In ABAQUS-Explicit a modified master-slave contact can be used, called balanced contact. For balanced master-slave contacts none of the objects will be set as master or as slave. Instead the contact will be calculated twice for each set of surface in contact, once with the first surface acting as the master surface and once with the second surface acting as the master surface. The average of the two corrections is applied to the contact interaction, see Figure 15. This will minimise the penetration of the contact bodies and will also give a more accurate result in most cases [14]. Balanced contact is used in the general contact algorithm. With general contact the contact domain is the only thing specified. Every face that can potentially be involved in contact, should be included in the contact domain, even if the element is an interior element. The general contact algorithm will then activate and deactivate faces when element fails, see Figure 16. In Deform-2D the surfaces are constantly renewed so the outer surfaces of a master or slave object always have relations to the other surfaces.

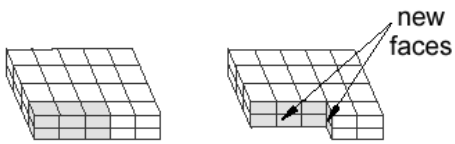

Figure 16. New contact surfaces after deletion of elements. Copy from [14].

The nodes are considered to be in contact as long as the nodal forces indicate a compressive state. When the nodes develop a tensile force, the nodes are considered to have separated from each other [17]. The procedure with constantly new contacts results in a non-linear simulation. It is also the most frequent reason for non-convergence during the Deform-2D simulations.

When surfaces are in contact they usually transmit shear as well as normal forces across their interface. The relation between these two force components is the friction between the contacting bodies. Simulation of friction is very difficult and sensitive, since contact condition, friction model and friction coefficient will influence the result. Consequently friction is an uncertainty factor. In both the Deform-2D and the ABAQUS-Explicit simulations, the Coulomb friction model was used. The Coulomb friction model defines the

friction shear stress as $\tau = \mu p$, where p is the normal pressure and μ the friction coefficient; μ is the same in all directions i.e. isotropic. In [14] experimental trials show that the friction coefficient that resists the slipping from a sticking condition is higher than the friction during slipping. Therefore, the friction should actually be divided into two parts, a "static" and a "kinetic" friction, where the static friction is higher than the kinetic friction. A maximum shear stress should also be set, since slipping may start as a result of yielding in the material. However, the friction coefficient is very difficult to estimate and therefore already an uncertainty factor. To keep the adjustable parameters to a minimum, the kinetic friction and the maximum shear stress were omitted in the simulation models. In simulation models where the results should be compared it is important that the same contact and friction conditions are used, but also that identical value of the friction coefficient are used, since the contact and friction influence the results.

2.4 Fracture simulation

One of the reasons to choose Deform-2D and ABAQUS-Explicit as simulation programs is that the implemented fracture models give the opportunity to divide objects, the steel sheets in these cases. The fracture criterion is evaluated in each element and when it exceeds the specific fracture criterion the element is deleted and a crack will be simulated. Unfortunately, none of the programs support element separation. Therefore, to limit volume loss, an extra fine mesh should be used in any region where fracture is expected [17]. In [18], different fracture models have been evaluated for SPR simulations with the conclusions that both the strain and the difference in stresses influence where fracture of the upper sheet occurs.

In Deform-2D, a damage model called normalised Cockroft & Latham [19] is used as the damage value D_f, The model implement the strain and the difference between principal and effective stress and it has been shown to predict fracture with reasonable accuracy, [20]. The damage value D_f is defined by the parameters seen in Figure 17, where the maximum principal stress divided by the effective stress is integrated over the effective strain until D_f reaches the predefined critical value; ε_f is then the effective fracture strain.

In ABAQUS-Explicit there are only two different failure models that include the possibility of element deletion, shear- and tensile failure. The shear failure uses the equivalent plastic strain as a failure measure and the tensile failure uses the hydrostatic pressure. In the SPR and pierce nut models the shear failure will be the most appropriate since the perpendicular cutting of the sheet will cause large shear stresses. In Figure 18 the shear failure can be observed. $\bar{\varepsilon}_f^{\,pl}$ is the strain at failure that must be specified. When the shear failure criterion is met (W=1) at an integration point, all the stresses will be set to zero and the material point fails [14]. The normalised Cockroft & Latham criterion used in Deform-2D is a more complex and a more correct fracture criterion according to [19].

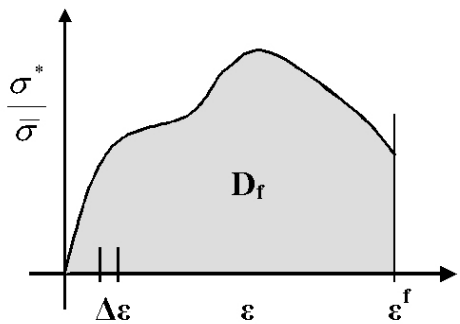

Figure 17. Cockroft & Latham fracture criterion, used in Deform-2D.

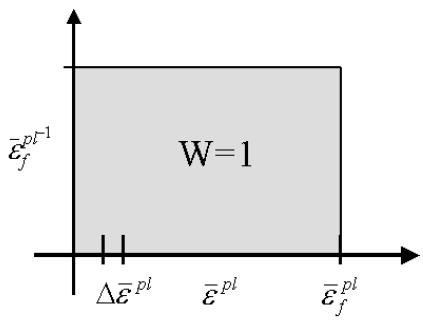

Figure 18. Shear failure criterion, used in ABAQUS-Explicit.

3 Simulation models

The main idea with the simulation models is that they should reproduce experimental results with reasonable accuracy in important aspects. At the same time, the models should be relatively simple to modify. It is also a requirement that the final solution should be found within reasonable solution times. When this is fulfilled, the SPR and pierce nut process can be optimised in an effective way.

3.1 Self piercing riveting

The SPR simulations were performed with the program Deform-2D and the subsequent joint property simulations were performed in 3D with ABAQUS-Explicit. A similar procedure was analysed in [21] with the simulation program LS-DYNA.

The SPR process simulation begins with the geometry seen in Figure 19. The riveting process involves large plastic deformations. To simulate this process, it is necessary to use formulations that consider geometry changes and material nonlinearity. During the riveting simulation, some elements in the mesh will become distorted. Since distorted elements will give incorrect results, remeshing was necessary in order to get reliable solutions. In Deform-2D, a new mesh is generated automatically and the informations from the old mesh are then interpolated to the new mesh. During a SPR process simulation, the mesh will be updated around 20 times for each object. The final joint geometry and the effective strain results from a SPR process simulation in 1+1mm EN 1.4301 stainless sheet steel can be observed in Figure 20.

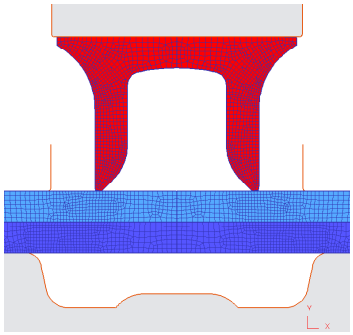

Figure 19. Start geometry and the Finite element mesh for SPR joint.

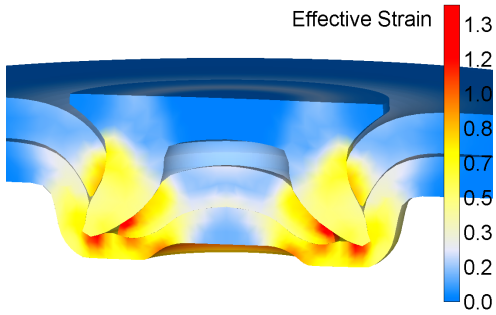

Figure 20. Final geometry showing plastic deformation, 3D-view from an axi-symmetric model.

The similarities between simulated geometry and experimental result can be observed in Figure 22. The calculated setting force can be compared to the experimental setting force in Figure 21. Differences in setting force occur in the latter part of the simulation, which probably depends on shortcomings of the material description for very high strains.

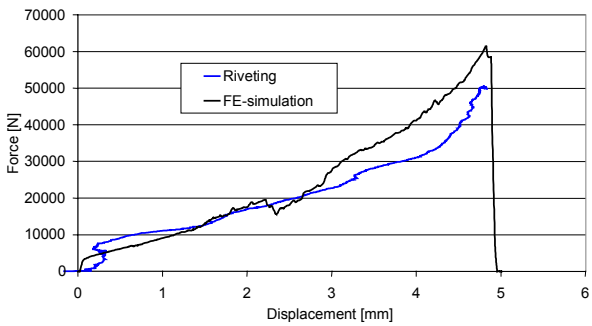

Figure 21. Setting force for experimental and simulated setting process.

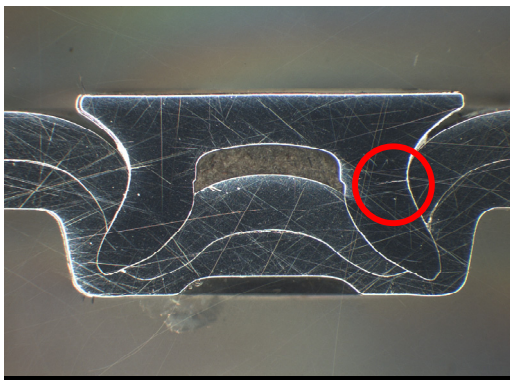

Figure 22. Experimental result, cracking in the rivets under head radius, red circle.

In Figure 22, a crack can be observed in the rivets under head radius. With a reliable simulation model the riveting process can be optimised and a solution to reduce the fracture risk can be found.

A final geometry from the process simulation in 2D was subsequently imported to ABAQUS-Explicit to evaluate the mechanical properties. Since the sheet material EN 1.4301 has showed significant strain hardening it is important to transfer both the final joint geometry and the strain level from the riveting process, this is evaluated in Paper III. These were manually transferred to the 3D-simulation model. Residual stresses have not been transferred to the mechanical testing model, which may leads to some effect on the result. To simplify the model, virgin material properties were used for the rivet, as strain hardening for the carbon steel rivets 480 HV is small. Because of symmetry, the simulated specimen has been split in the middle and only half the specimen has been modelled; the shear specimen can be observed in Figure 23. As seen in experimental trial, Figure 24, the simulated and experimental joints showed similar fracture behaviours with the rivet pulled out from the die sheet. The joint was also tested in peel mode, which is described in Paper III.

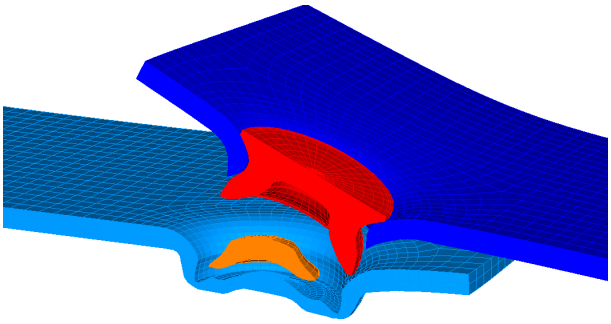

Figure 23. Simulated shear specimen: rivet pulled out from die sheet.

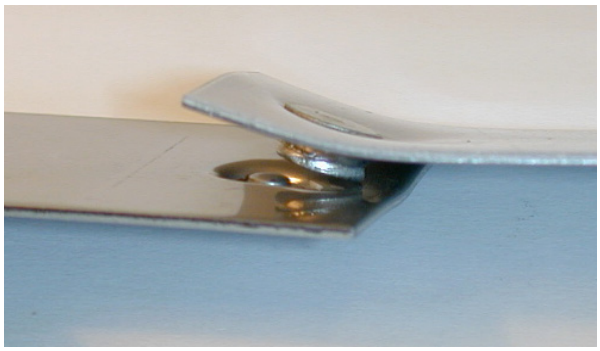

Figure 24. Final geometry, experimental shear specimen.

The 3D model, which is based on the results from the riveting process simulation, indicates that it is very important to transfer the plastic deformation in the sheet material and that the mechanical strength result is very friction dependent, see Figure 25. Since the simulation model in 3D begins without pressures between the objects an exceptionally high friction may compensate for that.

Even though the simulation results do not correspond exactly to the instrumented results, an arbitrary sheet combination, rivet geometry and die geometry could be evaluated effectively with this method. In Paper I, new geometries have been developed with the purpose to reduce the risk for rivet cracking. In Paper II, the mechanical properties for successful joints from Paper I have been evaluated.

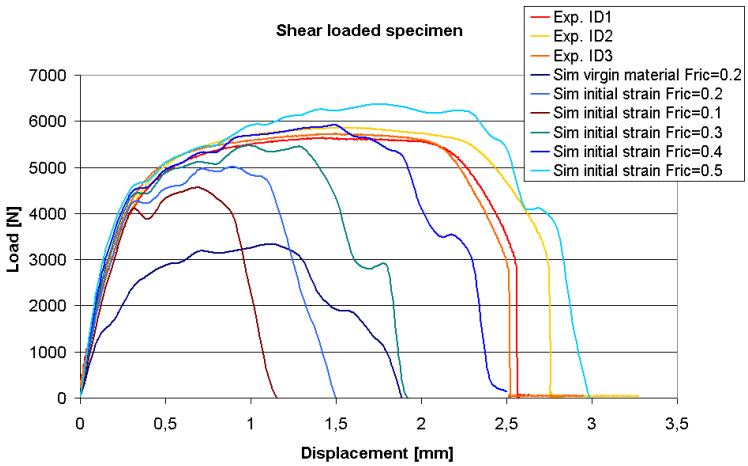

Figure 25. Load-displacement curves for shear loaded specimens with different friction coefficients.

3.2 Pierce nut

During industrial production, the installation performance is of great importance. The nut is not allowed to get loose from the sheet during any stage of the production line, and it is not allowed to rotate during assembly. Therefore, the torque resistance and push-out resistances are important in order to reduce standstill in production. Consequently, they are evaluated from the simulations.

The pierce nut process was simulated with three different models, all with different purposes. The axially symmetric simulation, Figure 26 was performed in Deform-2D. In 2D, some effects can not be evaluated with an axi-symmetric simulation model. Therefore, two 3D models were developed in ABAQUS-Explicit. The first 3D-model can be used to evaluate eccentricity of the nut, see Figure 27 and it is called the 3D-180° model. The second 3D-model, which uses cyclic symmetry, can be used to evaluate the torque resistance, since the teeth to prevent rotation, seen in Figure 29, are included. This model is called the 3D-30° model and it is seen in Figure 28. The axial symmetric model is the most time effective simulation, and in view of the fact that Deform-2D also is specialised on sheet cutting and large plastic deformation, it produces the most reliable results.

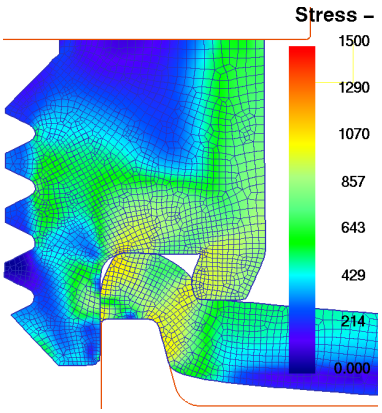

Figure 26. Axi-symmetric model of a nut setting process.

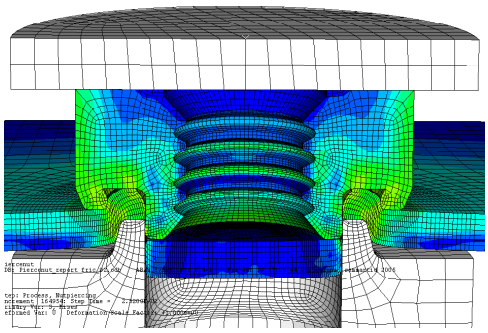

Figure 27. 3D-180° model of a nut setting process.

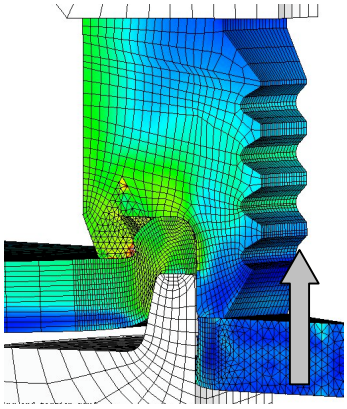

Figure 28. 3D-30° model. Arrow indicates push-out direction.

The material properties and the nut dimensions, with exception for the teeth that are omitted in the 2D and 3D-180° models, are identical in the simulation cases. However, the experimental nut may deviate slightly from those dimensions.

When simulating identical problems as seen in Figure 26-28, almost identical effective stresses where obtained in the three models. Comparing the load-displacement curves with experimental trials, Figure 30, the largest divergence between the models is observed during cutting of the sheet, which occurs at displacement 0.5-1.2mm. This depends on different fracture criteria and the fact that the element sizes vary between the simulation models. With exception for the cutting, the three models seem to predict identical setting processes. Deviations from the experimental results come partly from differences in the experimental nut geometry, since the nut geometry varies between individual specimens.

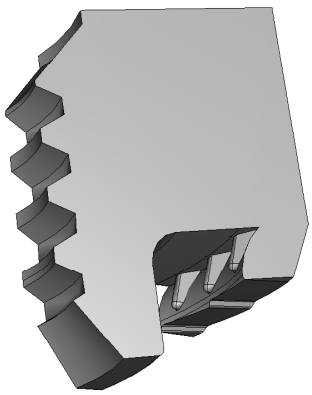

Figure 29. Teeth to prevent rotation inside the nut from the 3D-30° model.

Push-out strength was tested for the joints. The direction of the push-out load on the nut can be observed in Figure 28. The sheet is simultaneously constrained from moving in the vertical direction. In the simulations the pressure between sheet and nut is of great importance since the push-out resistance for this nut geometry almost exclusively consists of friction forces. The pressure is influenced by the amount of material pushed into the nut and the geometry of the sheet edge that is cut. Both are highly influenced by the element deletion that represented the cutting. As a consequence, the simulated push-out strengths vary between the simulation models, see Paper IV.

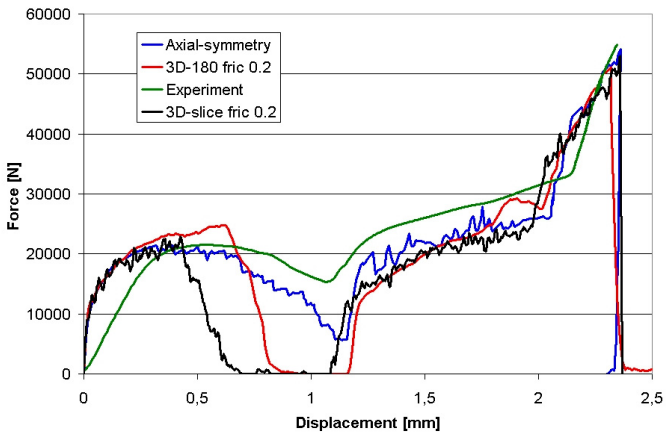

Figure 30. Setting forces from the three simulation models and corresponding experimental trial.

With a verified FEM model, FEM-simulation is an excellent way to evaluate and modify the setting process for better joint performance. It was believed that eccentric setting was one of the reasons that causes thread damage and a scatter in push out resistance when the nut was set in a high strength steel sheet. To evaluate that, the eccentricity was simulated with the 2D and the 3D-180° models. Since the 2D model is axi-symmetric, this model actually simulates a reduced die diameter, which is an approximation, but the "off-centred" 2D simulation will after all give some ideas about the robustness of the nut. However, the 3D-180° model probably produce the best results for an off-centred nut. The damage in the nut was measured as displacement in the thread, which is shown for different cases and models in Table 1. By increasing the nut strength from hardness 8 (H8) to hardness 10 (H10), which often can be done by heat-treatment, the thread compressions (Δz) and radial thread displacements (Δr) are reduced and thread damage can probably be avoided. For a more high strength steel sheet than DP600, geometry modifications of the nut and die are probably necessary.

Table 1. Thread movements in the simulation models [mm].

	ABAQUS 3D-180°		**ABAQUS 3D-30°**		**Deform-2D**	
	Δr	Δz	Δr	Δz	Δr	Δz
Centred H8	0.016	0.020	0.001	0.007	0.005	0.003
Off-centred 0.2mm H8	0.044	0.032	-	-	0.070	0.069
Off-centred 0.2mm H10	0.030	0.023	-	-	0.026	0.017

Because of the element density and the accuracy in cutting the sheet, the 2D-model is the most reliable for centred nut setting. It is also the most time effective, and it will therefore be used as the first tool to develop new optimised geometries.

4 Conclusions and future work

4.1 Conclusions

The industry demands are constantly increasing the hardness of the sheet steels that is used, and new materials are introduced in the structures. This leads to improved product quality, but it also gives new challenges with respect to production methods. The mechanical joining process is heavily affected by the material properties. Therefore, a number of simulation models have been developed and verified to give more understanding of the setting process and the joints mechanical properties for SPR and pierce nut joints. The simulation models can also be used to effectively develop new optimised joints for a specific steel sheet.

As long as everything is totally centred, the setting process of an SPR joint or a pierce nut joint can be well described with an axi-symmetric simulation model in the commercial software Deform-2D. Because of limitation with an axial-symmetric model, ABAQUS-Explicit was used to perform 3D simulations for the eccentric nut setting process, the torque resistance for pierce nut joints and the mechanical strength for SPR joints. ABAQUS-Explicit is a more general program but is not as satisfactory as Deform-2D regarding cutting and remeshing. When developing new geometries the axial-symmetric model is the most time effective and most reliable simulation model.

In all simulation models, independent of simulation program, the friction coefficient influences the results. Similar contact conditions and surface geometry of the sheet cut is also important when simulation results are to be compared.

In experimental trials fractures were observed in the rivets under head radius when using higher strength sheet steels or new rivet materials in stainless steel. In the simulation models the effective strain and the vertical stress were used as indicator of the fracture risk in the rivet. In Paper I, simulations showed that the strain and stress could be reduced by 50% through modifications of the rivet and die geometry.

The joint geometry from the riveting simulation was transferred to a 3D-model for simulation of the mechanical strength. The mechanical properties of joints with different geometries can in this way be compared and evaluated without expensive manufacturing of new rivets. Because of hardening of the sheet material it is important to transfer the strain level from the joining simulation to the simulation of the mechanical properties of the joints. In particular, this is important for materials that have much strain hardening.

Using the same section geometry from the SPR process simulation and only change the sheets material properties in the mechanical testing simulations i.e. the section geometry is identical, see Paper III. Simulations predict that the mechanical shear and peel strength was linearly proportional to the yield strength Rp0.2 of the sheet. Because of shorter elongation at failure, the fracture energy was almost constant, independent of the yield strength of the material.

Tests performed at Volvo Car Corporation indicate that there are risk for thread damage and low push-out resistance with a pierce nut RF-M6 set in a 1.45 mm DP600 sheet steel. A number of simulations were performed with three different simulation models. Each model is necessary for the evaluation of all interesting parameters. The three models performed identical setting processes except for the cutting of the sheet. The simulations indicate that a nut that is set eccentrically over the die in combination with hard sheet steel causes the thread

damage that was observed in instrumented trials. This, however, can be avoided by increasing the dimension of the nut or by increasing the strength of the nut material. Simulations also indicate that almost no mechanical locking occurs when a RF-M6 nut is set in high strength steel. Consequently the push-out resistance for a RF-M6 nut consists of friction forces. As a consequence of all contact conditions during the push out of the nut, it is difficult to get totally accurate results when simulating the push-out resistance. Comparison of results from different nut and die geometires can, however, be made. In paper IV, simulations showed that changing the die geometry increased the push out resistance. Experimental trials with similar die geometries to those used in the simulations verified the results.

4.2 Future work

Based on the work discussed above, there are primarily three main areas to improve in further studies.

Improve the simulation models

In this work the material properties were developed from compression tests of the material to achieve higher strains than in tensile testing. The stress-strain curves are probably sufficiently correct for strains up to ~0.3-0.4. However, this is still not enough since the sheet materials in the simulations locally have strains up to 1.5. A more correct material description for very high strains would therefore be desirable. Another way to improve the process simulations is to evaluate the fracture behaviour. Different materials and mesh densities influence the fracture conditions, which could be improved further. A fracture criterion that separates elements instead of deleting them will also improve the models. For the mechanical testing of the SPR joints, it would be desirable to revolve the axi-symmetric simulation with all parameters intact to a 3D-model for mechanical testing, using only one simulation software. Finally, with an increased computer performance a finer mesh can be used to refine the simulation model further with the same calculation time as today.

Build more models for other mechanical joining techniques

Most mechanical joining methods use plastic deformation and locking between parts to perform the joints. With reliable material properties it is relatively simple to use the approach from this work to build simulation models for, e.g., clinching or folding.

Use the models to optimise and design new joints

For new sheet materials introduced in the future, these models can be used to optimise or develop new rivet, nut and die geometries in a time and cost effective way. Since the simulations give an overview of the whole process, problems can be found and new geometries or material combinations can be tested much easier than by experimental investigations. The models also give the possibilities to optimise the setting process and the resulting mechanical strengths for joints used today.

5 References

[1] Svensson L-E., Larsson J K, *Welding and joining of high performance car bodies*, Steel world, 2002 vol. 7, pp 21-26, ISSN 1362-5292

[2] Dannbauer H., Gaier C., Halaszi C., *Development of model for self-piercing rivets to predict stiffness and fatigue life of aoutomotive structures,* SAE 2003-01-2857

[3] Fu Maofeng., Mallick P.K., *Fatigue of self-piercing riveted joints in aluminium alloy 6111*, International Journal of Fatigue, vol.25, no.3, pp183-189

[4] Aerobolts webpage, www.aerobolt.com.au, 2005-10-03

[5] Mortimer J., *Jaguar uses X350 car to pioneer use of self-piercing rivets,* Industrial Robot, Number 3 2001, pp192-198, ISSN 0143-991X

[6] www.machinedesign.com, 2005-10-09

[7] www.twi.co.uk, 2005-10-09

[8] www.attexorinc.com, 2005-10-09

[9] *Single operation insertion of fasteners cuts costs*, Sheet Metal Industries, February 1977, pp121-124

[10] Quick G. C., *Automatic, self adjusting pierce nut and stud installation tooling*, PMA Technical Symposium Proceedings, vol 5, 1995.

[11] Finnveden fasteners webpage, www.finnveden.com, 2005-12-09

[12] www.profil-verbindungstechnik.de, 2005-12-09

[13] Voelkner W., Jesche F., Lachmann L., *Joining by forming – newer developments*, Journal for Technology of Plasticity, vol.27 (2002)

[14] Hibbit, Karlsson & Sorensen ABAQUS v6.4, users manual.

[15] Ugural A.C., Fenster S.K., *Advanced strength and applied elasticity 3rd ed.*, ISBN 0-137589-X

[16] Cook R.D., Malkus D.S., Plesha M. E., *Concepts and applications of finite element analysis 3rd ed.*, ISBN 0-471-84788-7

[17] Deform-2D, users manual.

[18] Dölle N., *Numerische Simulation des Fügesprozesses beim Stanznieten mit Halbhohlniet von duktilen Blechwerkstoffen* (2001), ISSN 1434-6915

[19] Cockroft M.G., Latham D.J., *Ductility and the workability of metals.,* Journal of the Institute of Metals 96 (1968), pp33-39

[20] Thunvik D., *FE-simulation of trimming*, M.Sc. Thesis, IM-2004-115

[21] Porcaro R., Hanssen A.G., Langseth M., Aalberg A., *Through process modelling of self-piercing riveting,* 8th International LS-DYNA User Conference

Summary of appended papers

Paper I. New sheet material and sheet combinations are constantly introduced in the automotive industry. As a consequence of this, new joining technologies are developed and old technologies are optimised. Self piercing riveting (SPR) is a relatively new technique that has to be optimised for a specific sheet combination. Fractures have occurred in experimental trials with stainless rivets joining stainless steel sheets. Finite Element simulation was used to detect the fracture limit in the stainless rivet material Val2Mon. Subsequently simulation was used to develop new rivet and die geometries to reduce the fracture risk in the rivet.

Paper II. Manufacturing of new rivet geometry is very expensive. Due to this, the mechanical shear and T-peel strength of SPR joints developed for stainless steels were predicted using FEM simulations. The method and the accuracy of the results were verified with experimental trials. The simulation was also used to evaluate the effects of joint strength related to the strength of the stainless sheet steels.

Paper III. In this paper the riveting process is simulated, as well as the subsequent mechanical testing of the SPR joint in EN 1.4301 austenitic stainless steel sheets. Joints have been performed in instrumented trials and mechanical testing was performed on joints in shear and T-peel configurations. The agreement between calculations and experiments was checked regarding geometry and setting forces.

Paper IV. Pierce nut is a cost effective and time saving technique mainly used in the automotive industry. It is in most cases installed in the same presses used to stamp the sheet part. Pierce nuts make their own hole through the sheets. According to investigations carried out by Volvo Cars Body Components the thread inside the nut was damaged, and irregular mechanical properties were obtained when the production nut was set in a sheet of high strength steel (DP600). Three finite element simulation models were developed to explain the problems and to suggest solutions. Each of these was necessary to evaluate all relevant parameters. To verify the simulation models, equipment for controlled nut setting and testing of mechanical properties was built at the Corrosion and Metals Research Institute. All simulation models were verified with satisfactory result. By increasing some dimensions of the nut, or by increasing the strength of the nut material from Grade H8 to H10, the thread damage was reduced to a reasonable level. However, the mechanical properties still showed some scatter. The three simulation models also give the opportunity to develop new optimised SPN joints.